Gotion

Integrated Commercial and Industrial Energy Storage Cabinet

Quick Installation Manual

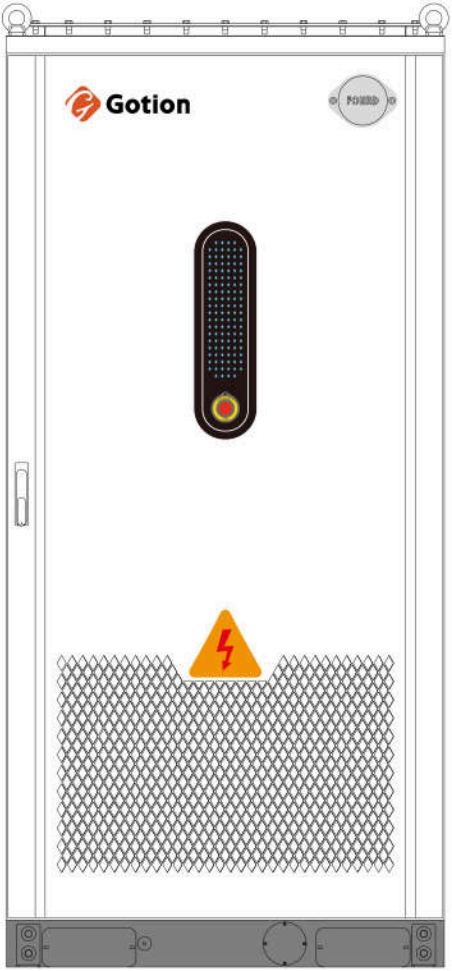

Before installing the equipment, please read the user manual thoroughly to understand product information and safety precautions. Damage resulting from failure to store, transport, install, or use the equipment in compliance with this document and the user manual will not be covered under the product warranty.

This document may be updated periodically due to product version upgrades or other reasons. Unless otherwise agreed, this document is intended for guidance purposes only. All statements, information, and recommendations provided herein do not constitute any express or implied warranty.

Contents

Appendix 01 ---------- 1
1.Product Appearance ---------- 2
1.1 Dimensions ---------- 2
1.2 Functional Area ---------- 3
2.ESS Installation ---------- 4
2.1 Packaging Removal ---------- 4
2.2 Cabinet Handling ---------- 5
2.3 Maintenance Channel ---------- 7
2.4 Anchor ixing ---------- 8
2.5 Install Blocking Plate ---------- 9
Appendix 02 ---------- 10
2.6 Outlet method ---------- 11
3.Wiring ---------- 14
3.1 Ground Wire ---------- 14
3.2 Power Line ---------- 16
3.3 Communication Line ---------- 18
3.4 Follow-up Procedure ---------- 20
4.Check Before Power-On ---------- 21
5.Power-On ---------- 23
5.1 Connecting battery pack cables ---------- 24
5.2 AC side power-on process ---------- 25

◆ Appendix 01

• Protective Gear

Goggles

Insulated gloves

safety shoes

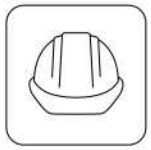
helmet

• Installation Tools

forklift

screwdriver set

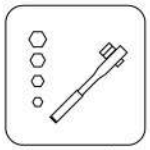
socket wrench set

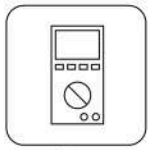
multimeter

hammer

marker

utility knife

impact drill

Crimping pliers

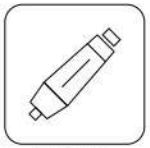
heat gun

• Installing Supplies

Expansion bolt

diameter M12 or 1/2"
(length depends on the site, recommended ≥80mm)

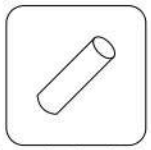
heat shrink tubing

1.Product Appearance

1.1 Dimensions

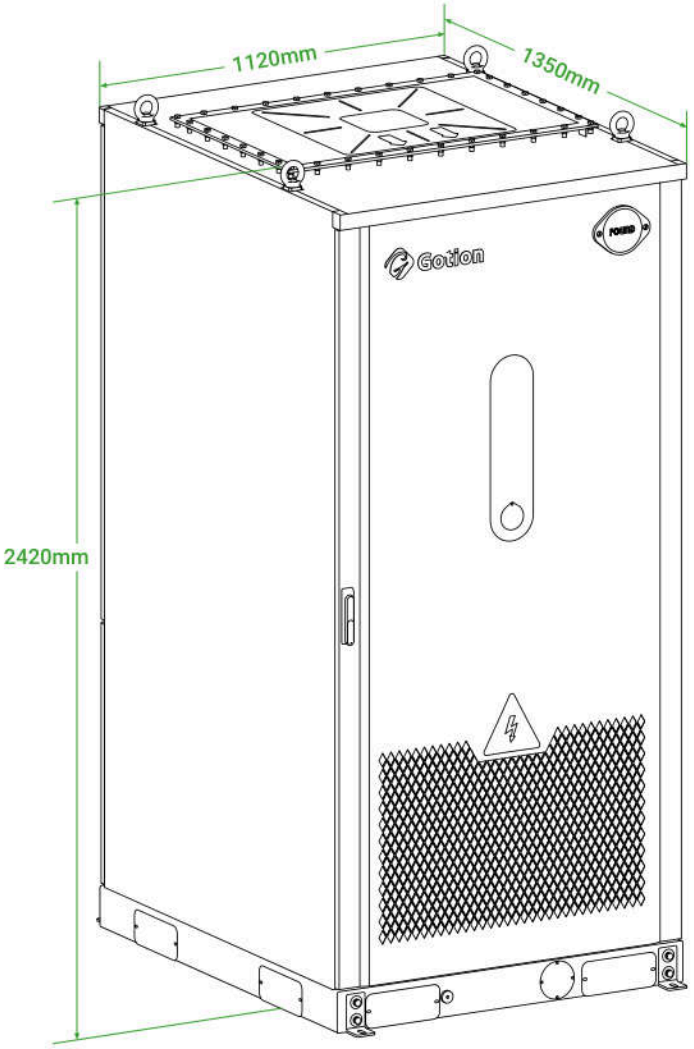

1.2 Functional Area

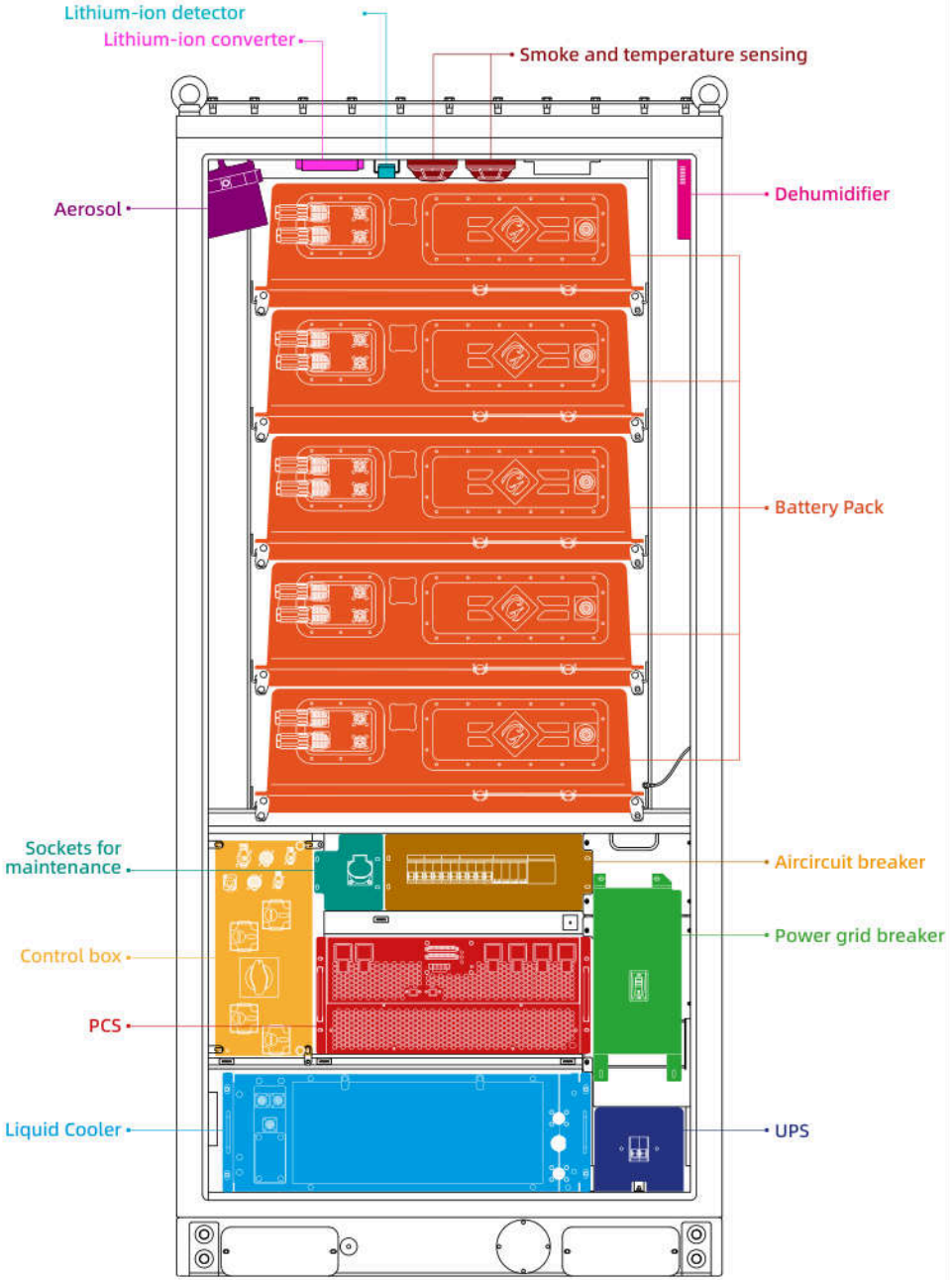

2.ESS Installation

2.1 Packaging Removal

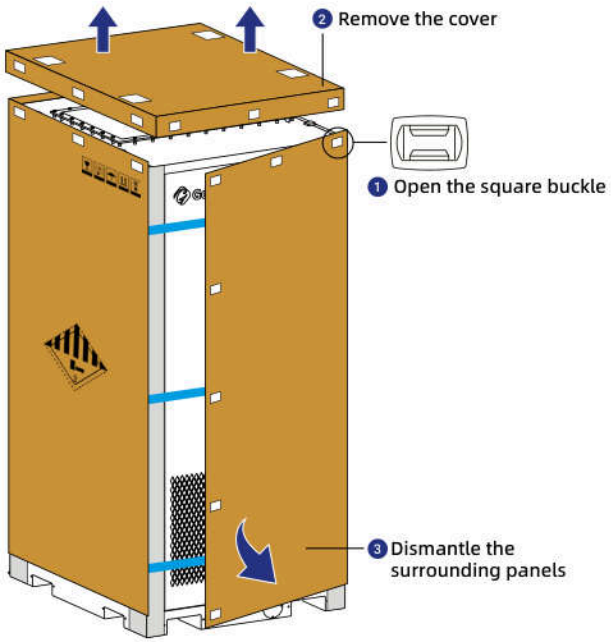

4 Cut the tie

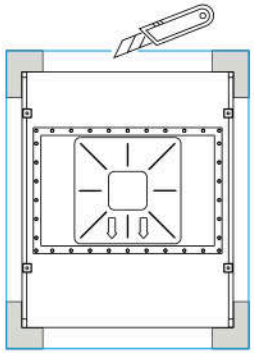

5 Remove the EPE cushioning cotton

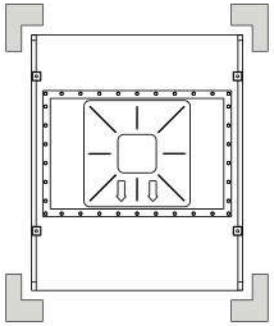

2.2 Cabinet Handling

Plan A: Forklift handling

- Forklift: load-bearing capacity ≥ 3t

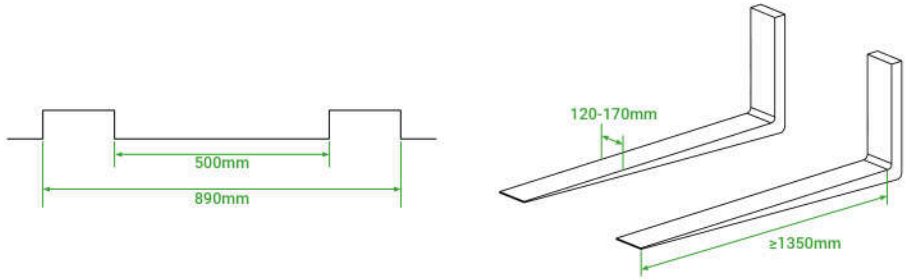

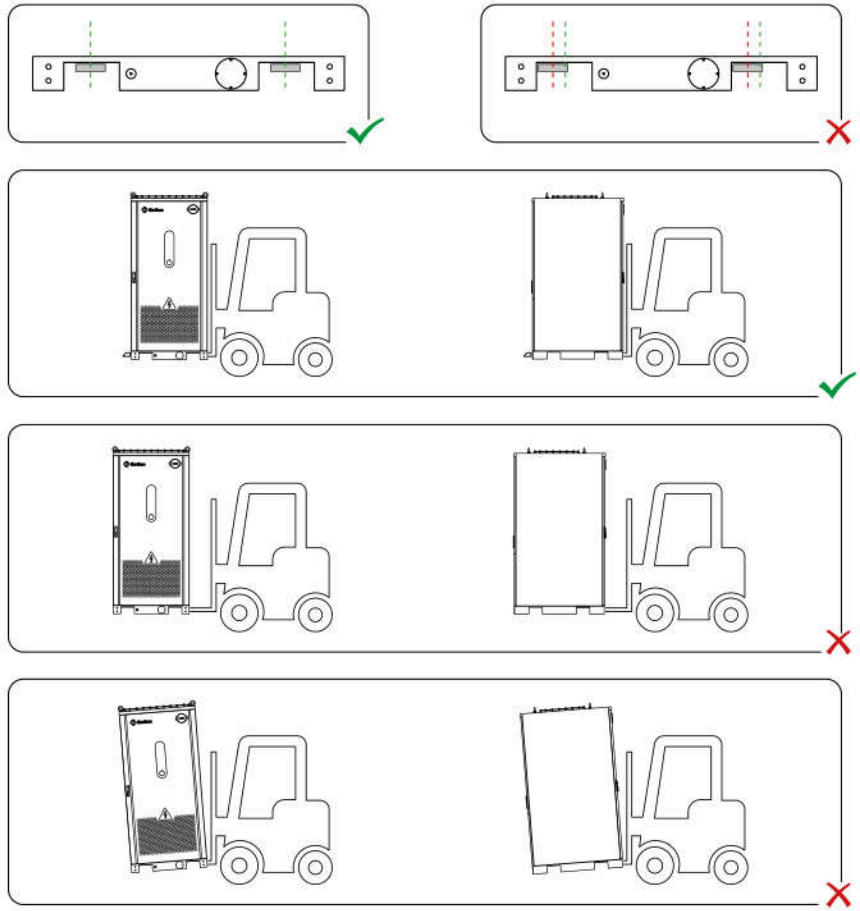

2.2 Cabinet Handling

Plan B: Crane handling

- hoisting capacity ≥ 3t operating radius ≥ 2m

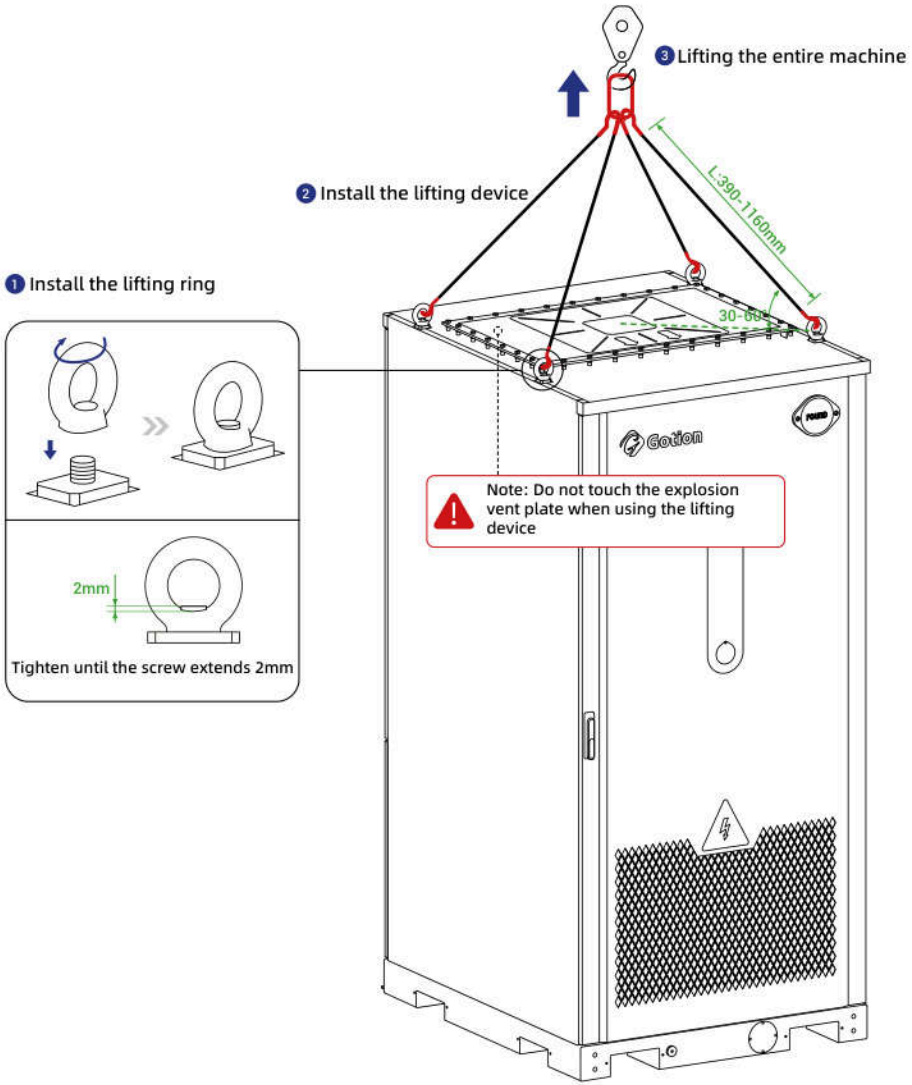

2.3 Maintenance Channel

A.Back to Back

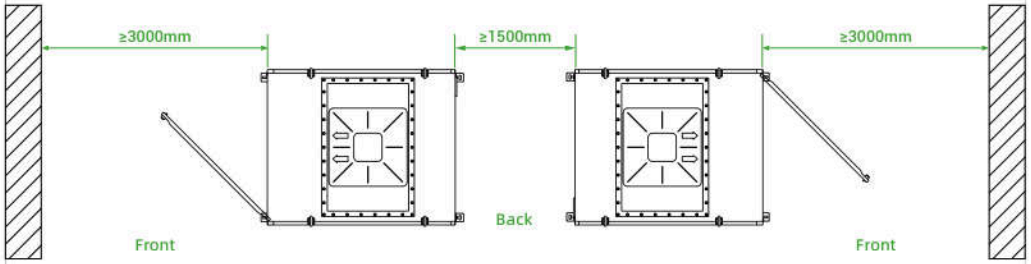

B.Face to Face

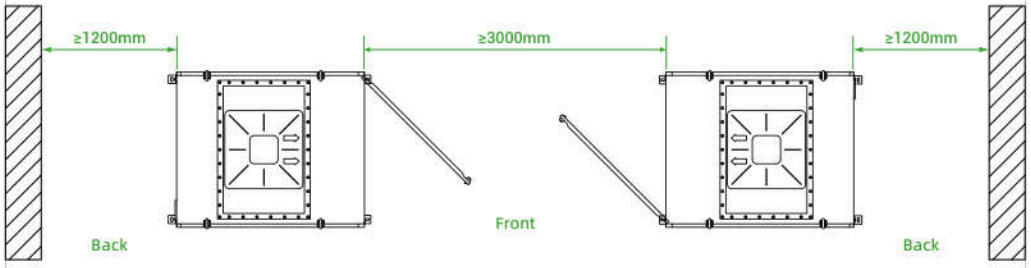

C.Parallel operation

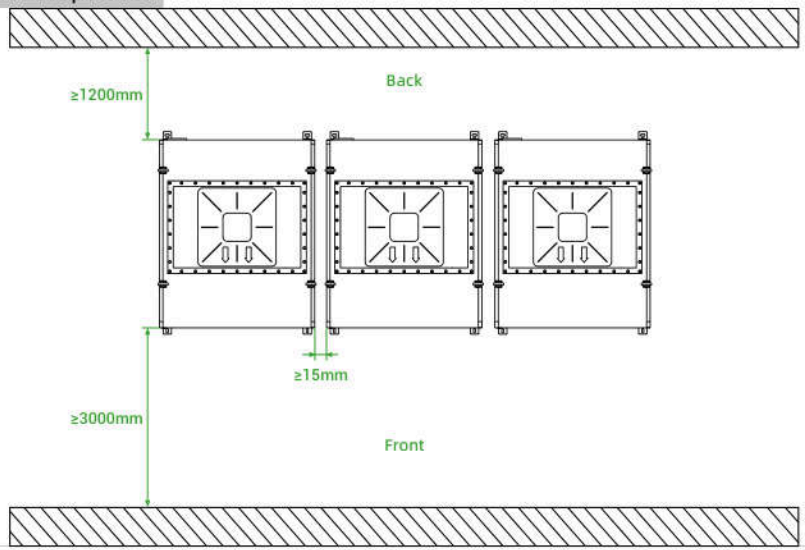

2.4 Anchor fixing

2.4.1 Equipment fixation

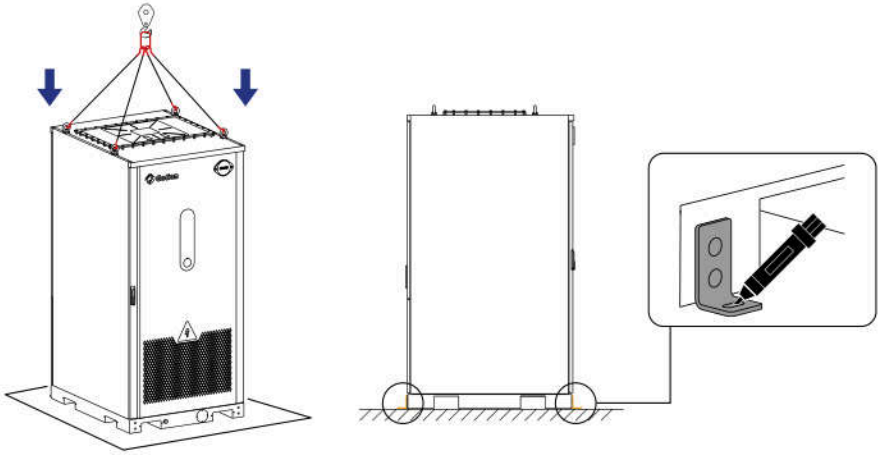

2.4.2 Install expansion screws

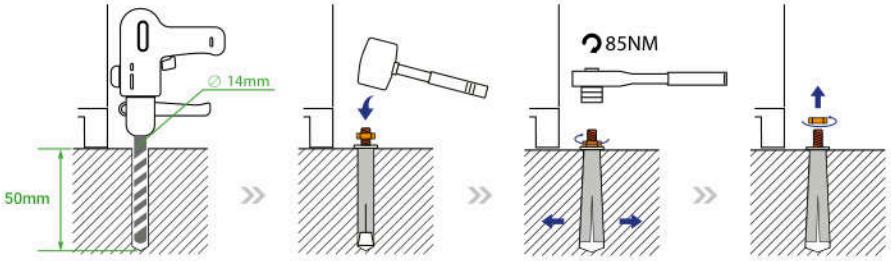

2.4.3 Install cabinet fixings

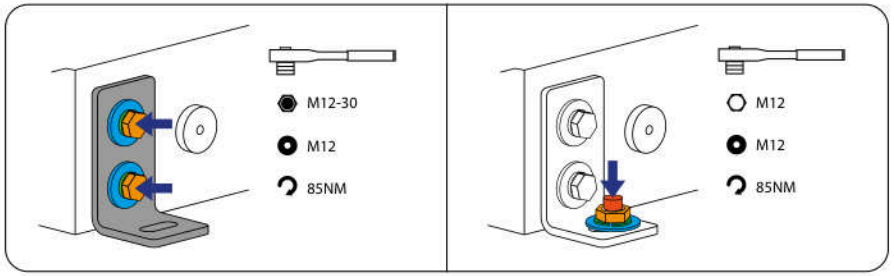

2.5 Install Blocking Plate

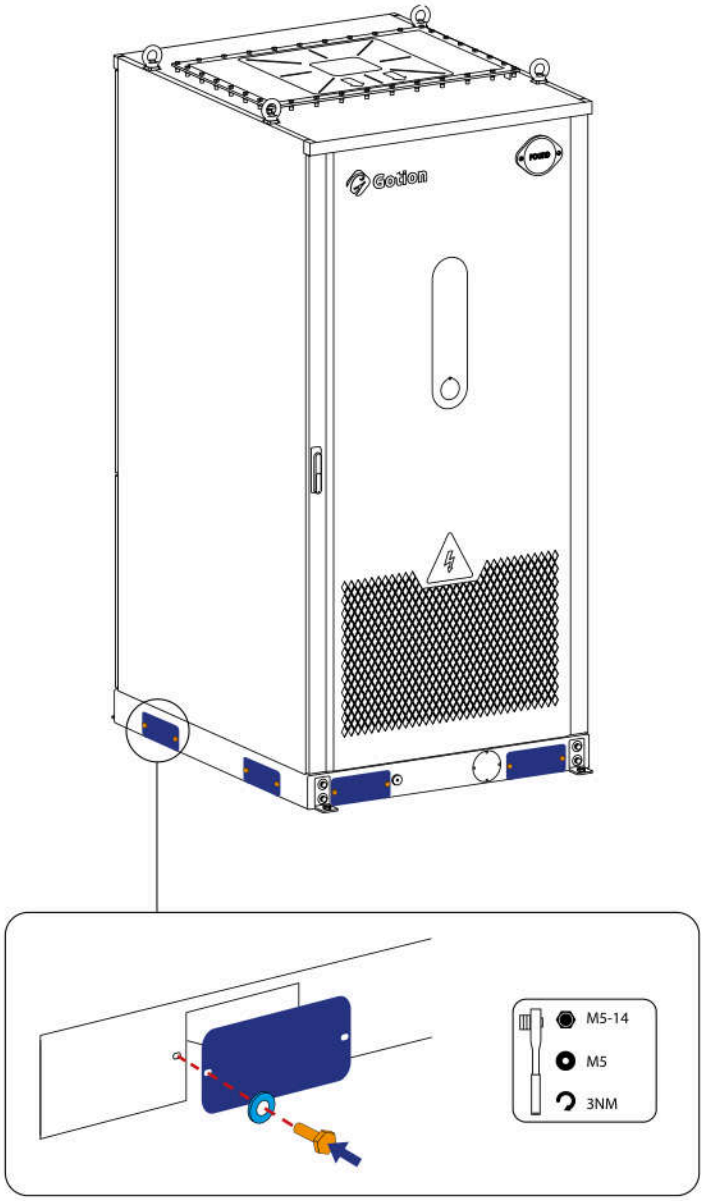

◆ Appendix 02

Bottom outlet hole parameters

Top view

Back

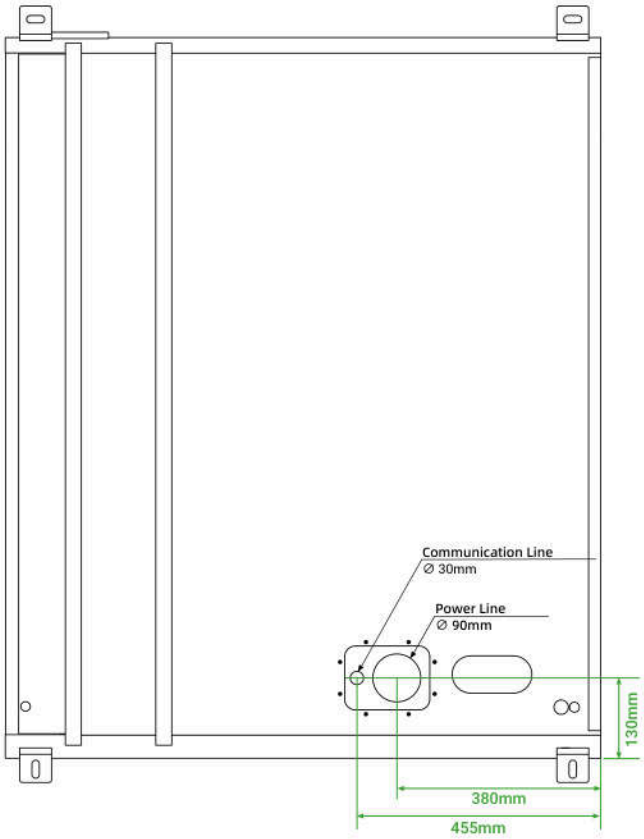

Front

2.6 Outlet method

Three outlet schemes are provided

Scheme 1: Bottom outlet

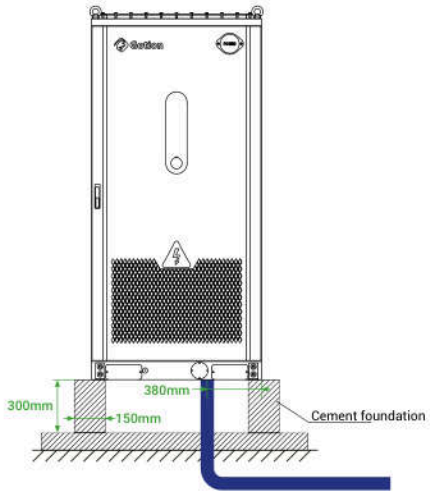

Parallel operation

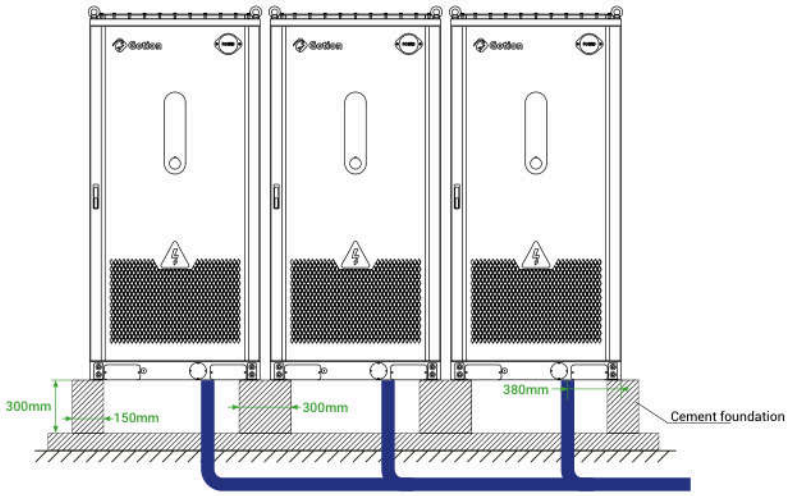

Scheme 2: Bracket side outlet

• Please contact salesperson for Bracket's drawings

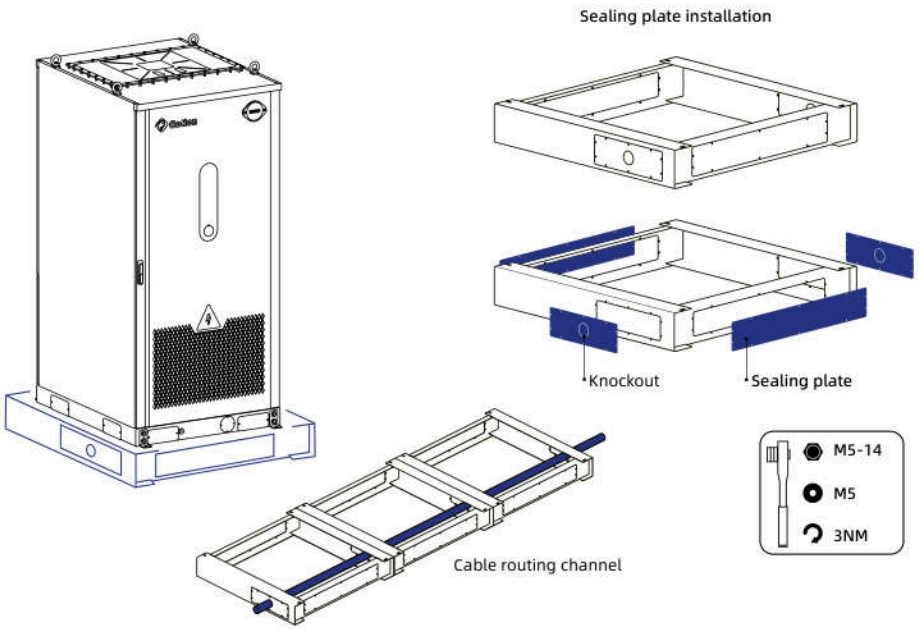

Parallel operation

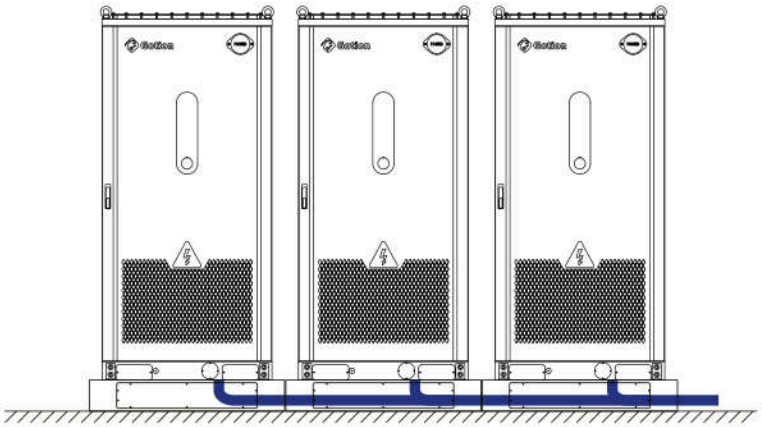

Scheme 3: Front-end outlet

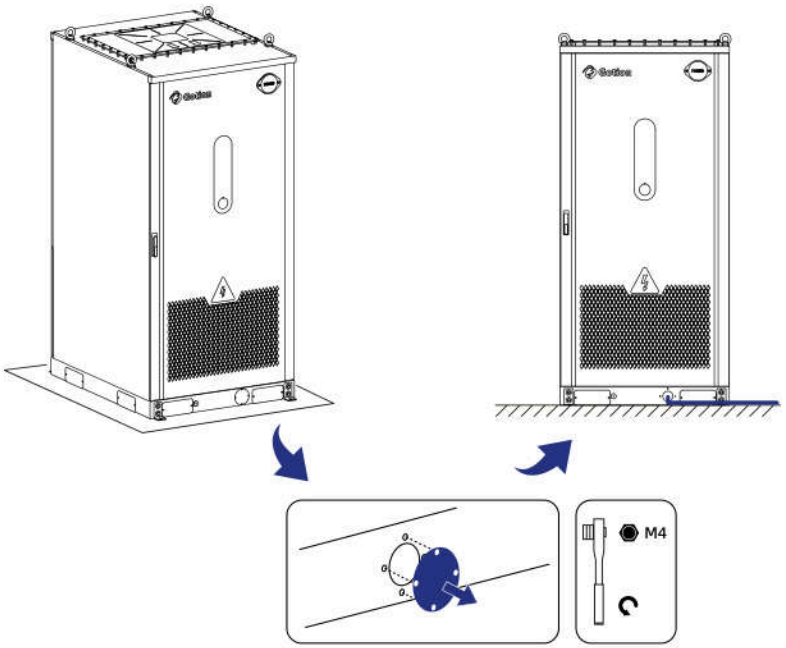

Parallel operation

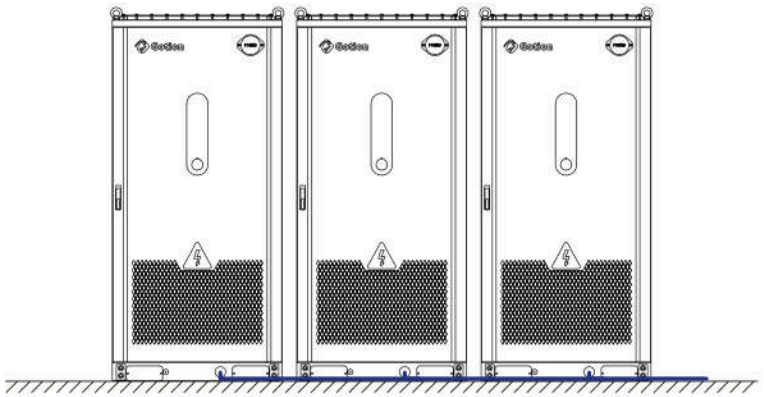

3.Wiring

3.1 Ground Wire

•Single-core outdoor copper/copper-clad aluminum/aluminum alloy cable

Plan A:

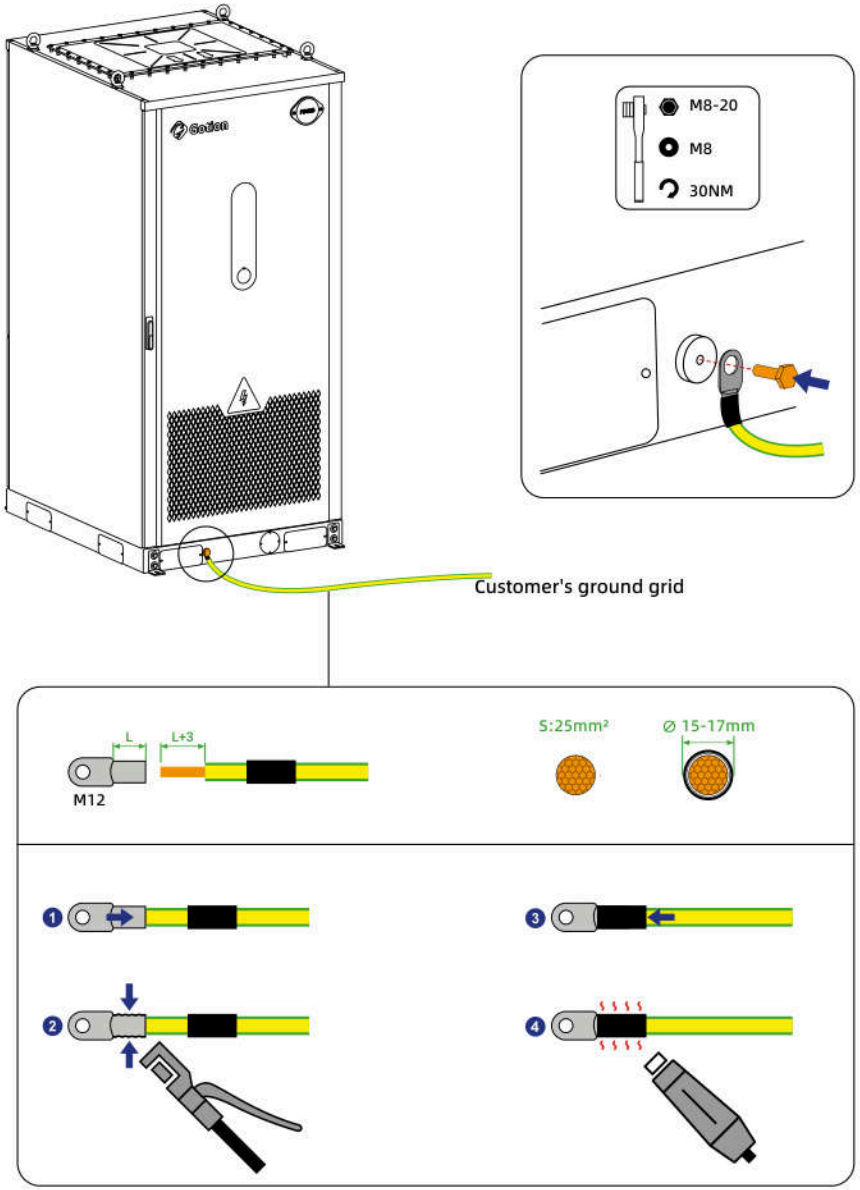

3.1 Ground Wire

Plan B:

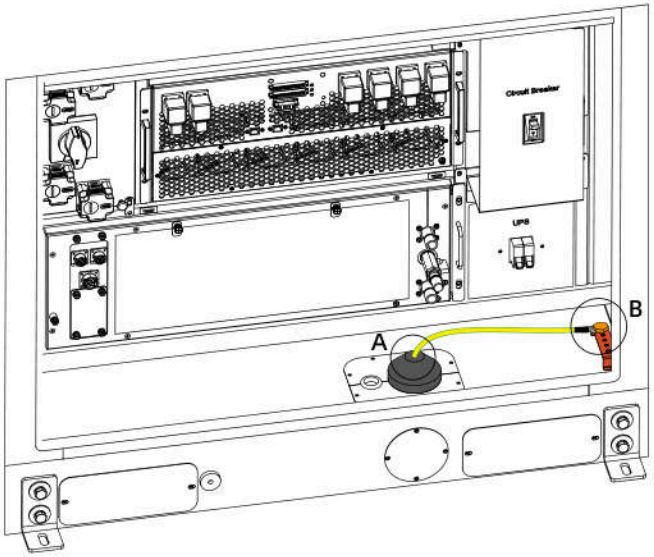

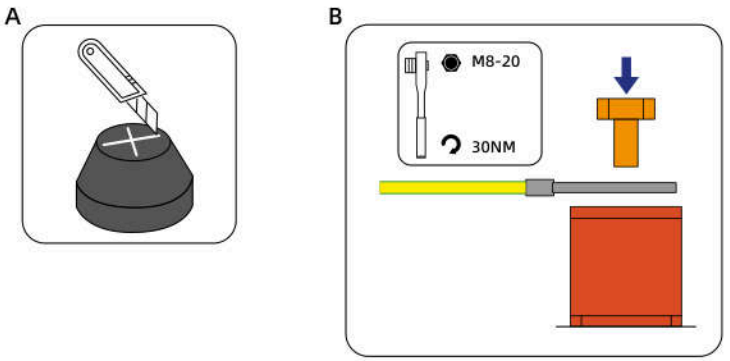

3.2 Power Line

•The selection of wire diameter should comply with local cable standards

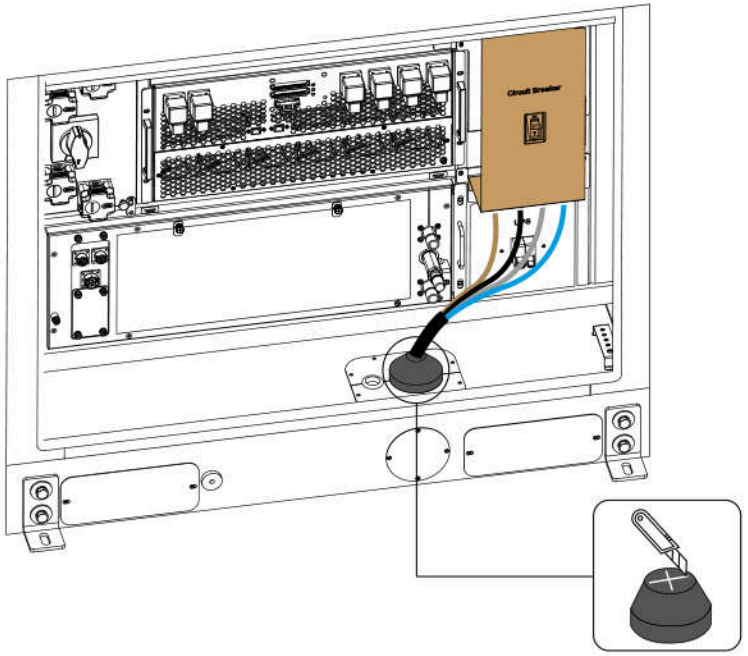

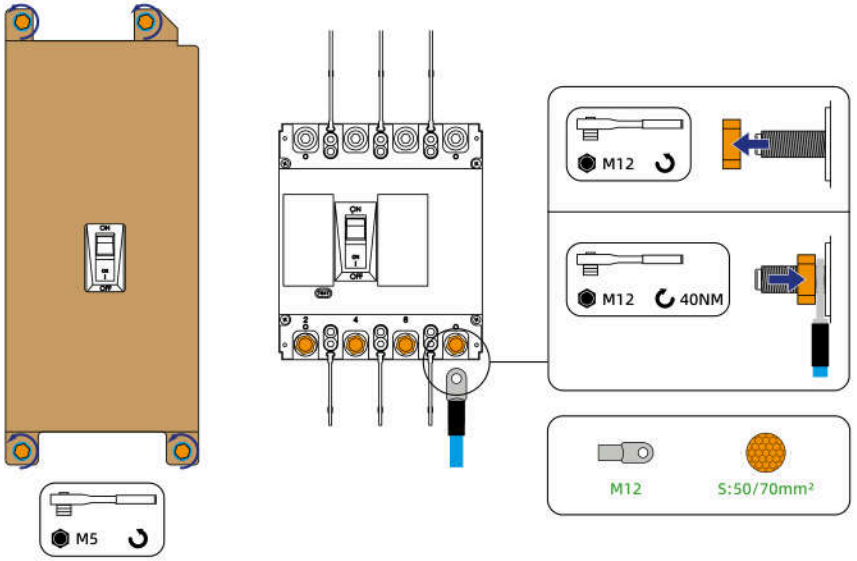

3.2 Power Line

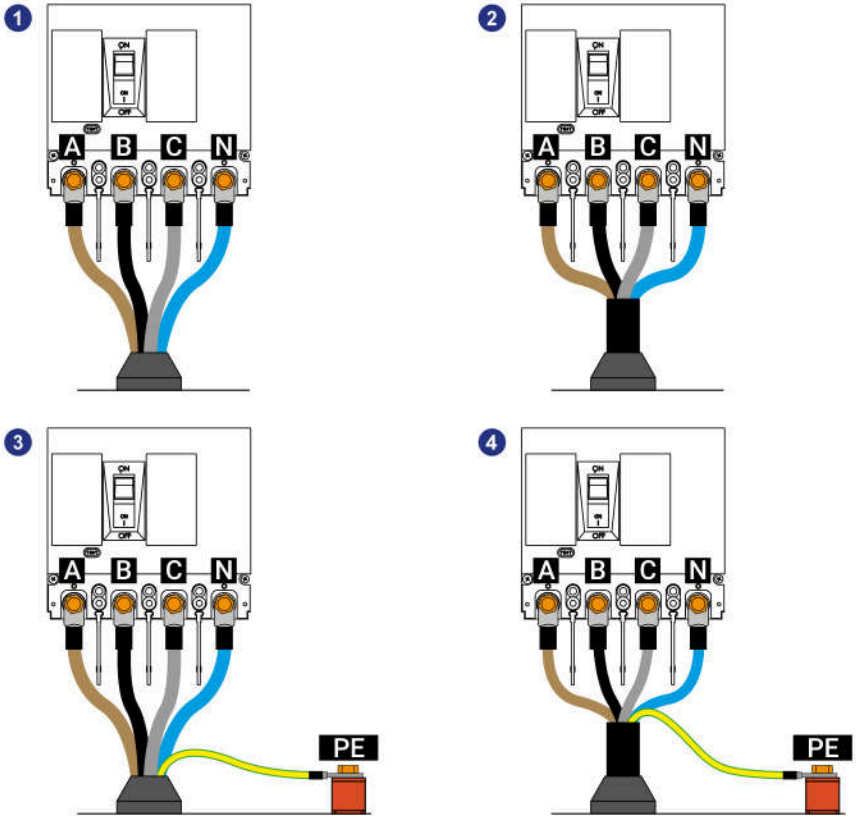

fix the cover after completing the wiring

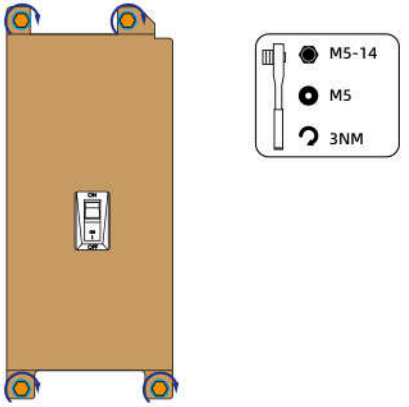

3.3 Communication Line

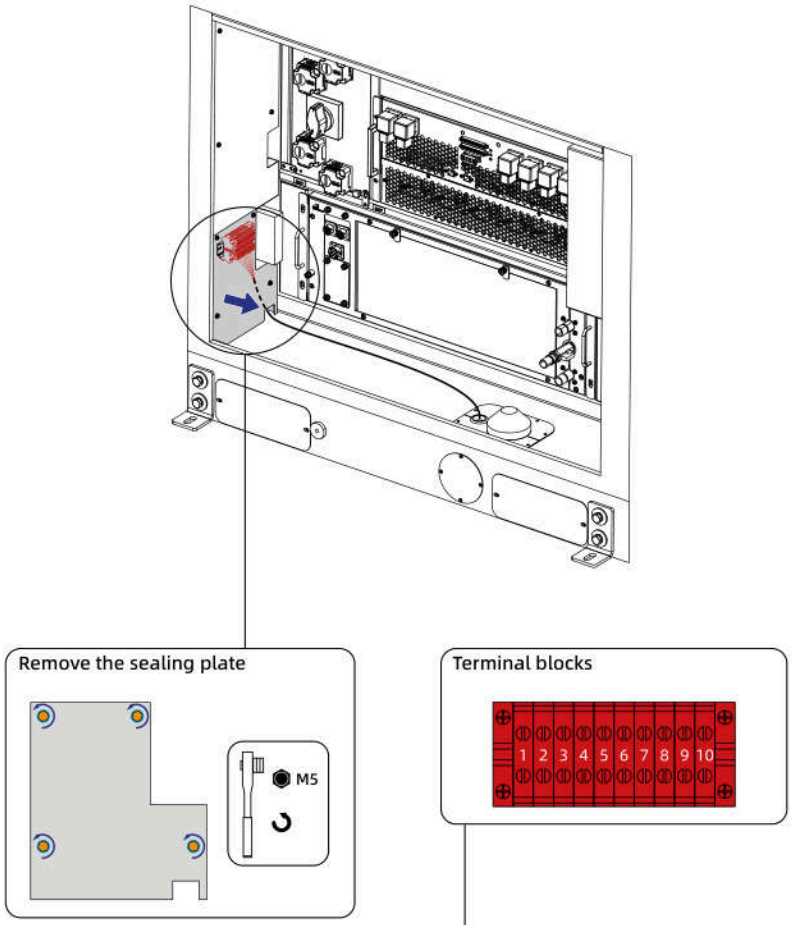

NumberManager		Wire Gauge	Description
1	24V+	2*0.5mm2	24V, ≤ 20W power output (only for equipment inside the cabinet)
2	0V		
3	GL+	0.5mm2	12V, ≤ 10W isolated power output (for equipment inside the cabinet only)
4	GL-		
5	485B1	2*0.35mm2 (Shielded twisted pair)	Parallel operation or communication with external EMS (Modbus-RTU protocol, baud rate 9600)
6	485A1		
7	232 R2	3*0.35mm2	Used to connect to the Ethernet module and communicate using the MQTT protocol (the 232-to-Ethernet module is not included by default and can be configured as an optional accessory)
8	232 T2		
9	232 GND2		

3.3 Communication Line

Modbus-TCP

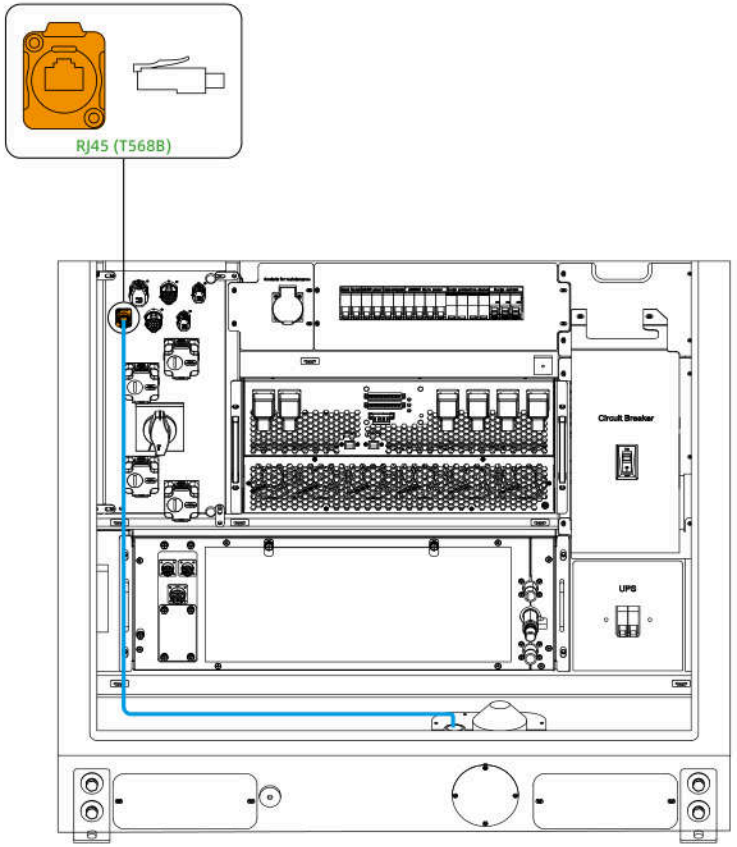

3.4 Follow-up Procedure

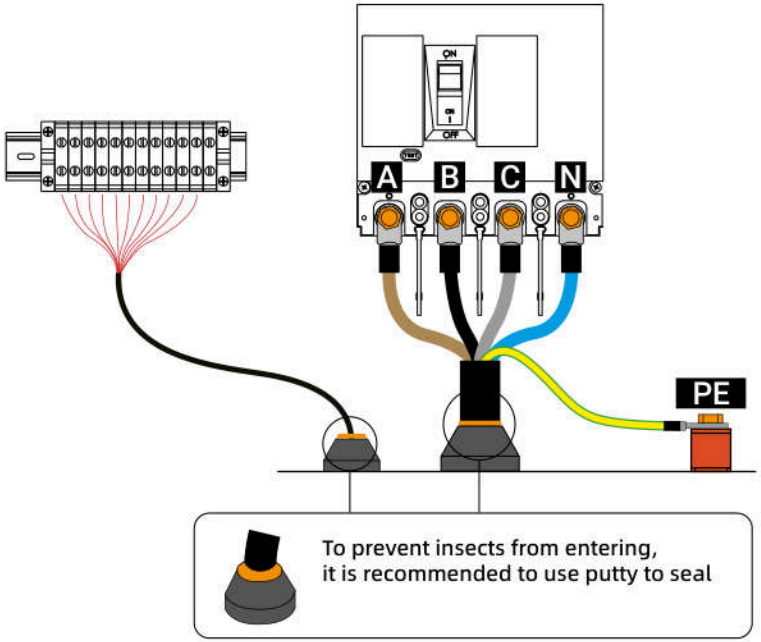

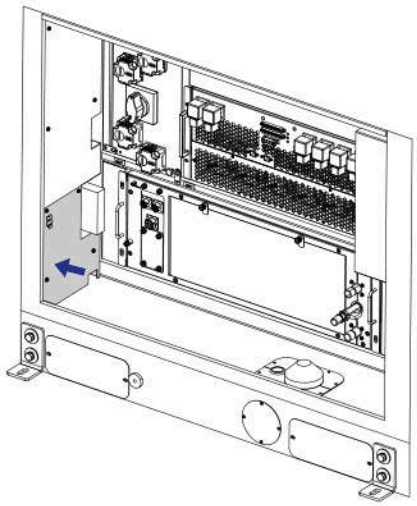

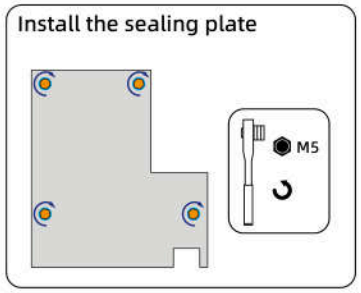

4.Check Before Power-On

Equipment exterior		☐ The device is in good condition, free of damage, dents, rust, or paint peeling. ☐ The device label is clearly visible, undamaged, warped, or faded. ☐ The nameplate is intact and legible. ☐ The battery pack label is clear and accurate.
Equipment components		☐ The hatch should open and close normally. ☐ The door lock should open and close normally. ☐ The firefighting equipment should be externally undamaged. ☐ The aerosol housing should be securely fixed and not loose. ☐ The aerosol head detonator should be securely installed. ☐ The detector should be securely installed (the hand-cranked detector should not shake), and the wire connections should be secure. ☐ The PCS, liquid cooler and piping, firefighting equipment, control box, battery pack, and other components should be correctly installed.
Maintenance channel		☐ When using a cabinet structure with multiple rows, the cabinet layout maintenance channel width should meet the requirements of this manual.
Switch		☐ The switch is in the off position
Cable	Cable exterior	☐ The cable is clearly colored and marked, the insulation is intact. ☐ The cable duct is functioning properly. ☐ The cable retaining ring is intact and in working order.
	Cable connection	☐ Cable connections comply with the requirements of this manual. ☐ Terminal connections are secure and meet specifications. ☐ Labels are clearly labeled at both ends, with labels facing the same direction.
	Cable routing	☐ Cables are neatly arranged, with no crossover. ☐ Cable routing adheres to the principle of separating strong and weak currents. ☐ Corners are properly sized with adequate margins and no cables are strained.
	Cable Material	☐ The cable is flame retardant

5.Power-On

1. Wear insulated gloves and use insulated tools to prevent electric shock or short circuits.
2. During the power-on procedure, monitor the system for faults. If you detect any faults, power off the ESS, rectify the faults, and then continue with theprocedure.
3. If batteries are fully discharged or overdischarged during system installation and commissioning, charge the batteries promptly to prevent damage due to overdischarge.
4. Storing batteries with low SOC may cause damage due to overdischarge. Charge the batteries promptly to prevent damage.
5. If the ESS has not been used for six months or longer after being installed, it must be checked and tested by professionals before operation.

5.1 Connecting battery pack cables

The battery pack power supply series line is disconnected when shipped and needs to be connected by the customer

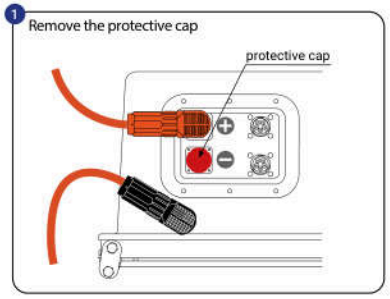

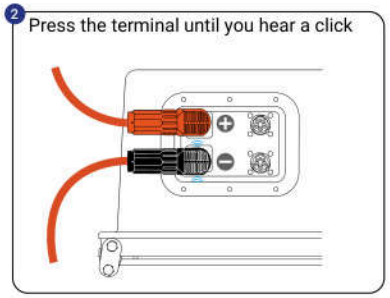

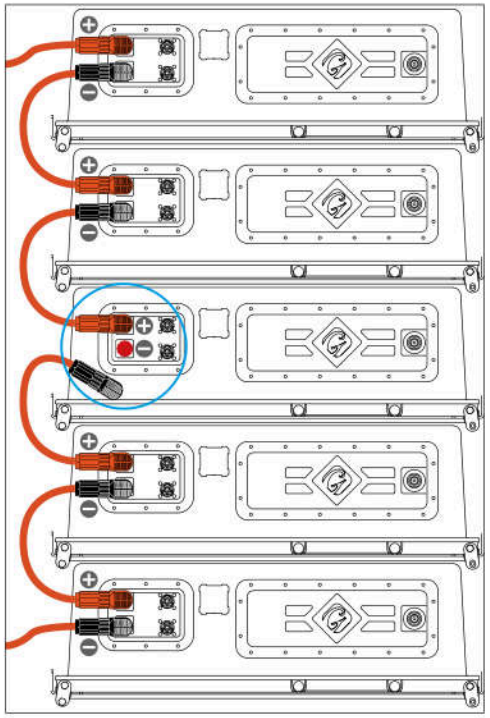

5.2 AC side power-on process

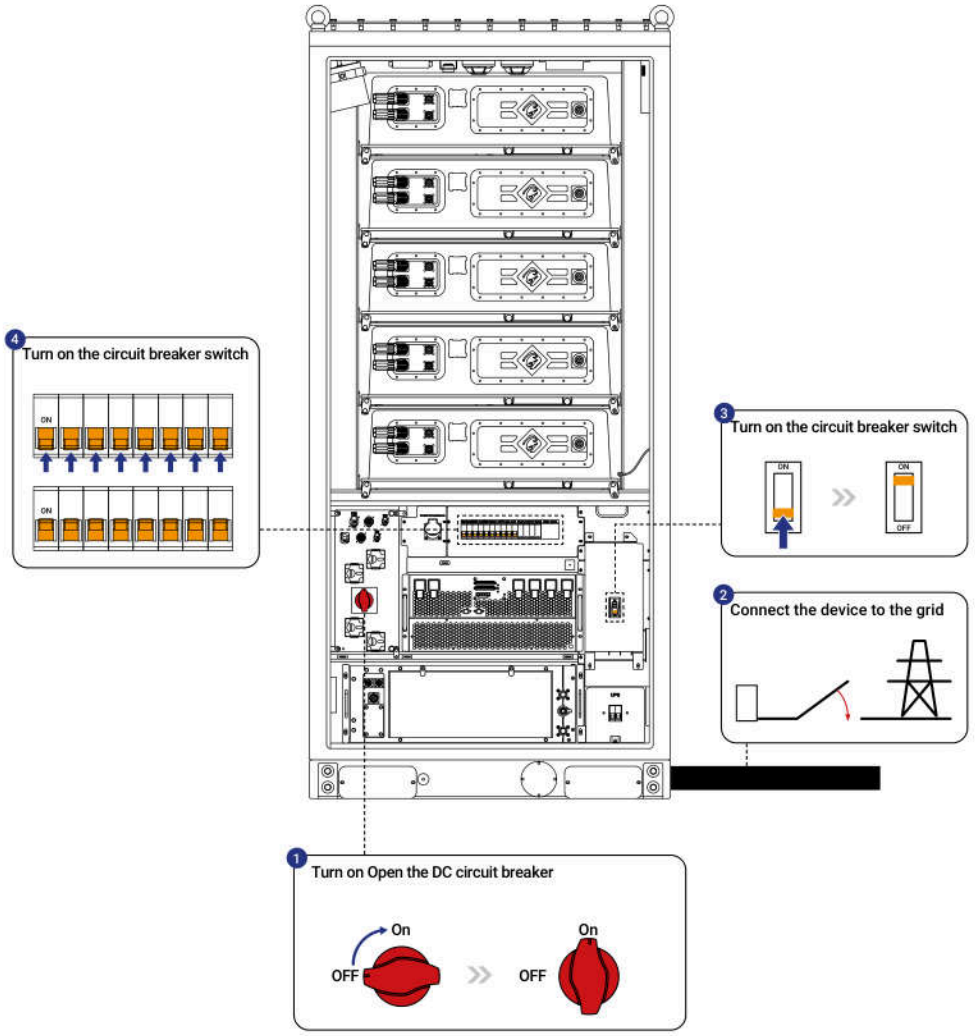

Gotion

Gotion BESS Ltd.

Gotion Bess Ltd, Schijfstraat 8, 5061 KB, Oisterwijk, The Netherlands
+31 (0) 73 614 77 15
sales@gotion-bess.com